AMARANT Coffee Table

The Amarant side table is a marriage of a magazine holder with a side table. Inspired by blooming flowers these furniture designs present your most favourite magazines in an elegant way.

These tables feel right at home in a living room, lobby area, library or any waiting room. Making these spaces look colourful and fascinating.

Information

Design:	Spell, 2012
Material:	Solid Wood, Steel.

Colours

Black .BL	White .WH	Perl Beige .CH	Perl Gold .GO	Yellow .WH

Wood

Black Wash .099	Walnut .100

For more options, please contact us.

Dimensions (LxWxH)

Product:	Ø 101 x 39 cm / Ø 39.8 x 15.4 inch
Package:	105 x 102 x 41 cm / 41.3 x 40.2 x 16.1 inch

Weights

Product:	20 kg	Package:	23 kg

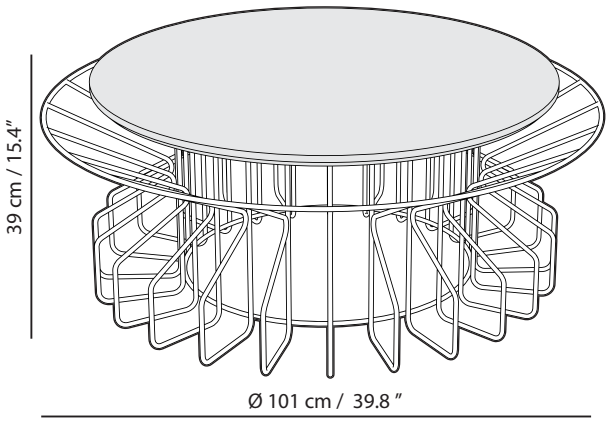

Marks

Made in Holland

FSC

*Specifications are subject to change without prior notice.
Colours on screen/print may not be representative.

info@spell-online.com | www.spell-online.com