CATWALKER Table

The solid wooden Catwalker Table is entirely produced in the Netherlands and draws inspiration from the finesse and precision of fashion runway shows.
Create the perfect stage on which to share a delectable dining experience or a unique working station.

Tailored sizes and combinations are possible on request.

Information

Design:	Sander vd Haar, 2011
Material:	Solid Wood

Wood

Oak	White Wash	Gray Wash	Black Wash	Walnut
.000	.012	.020	.099	.100

For more options, please contact us.

Dimensions (LxWxH)

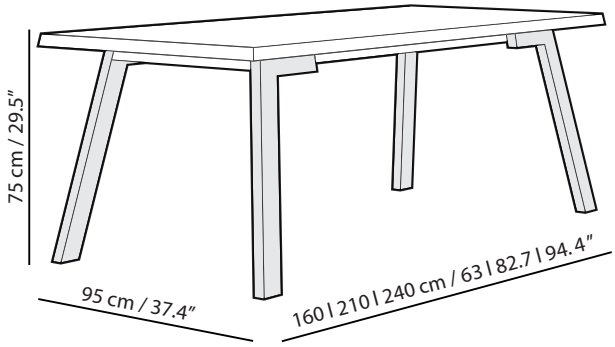

Product:	160 x 95 x 75 cm / 63 x 37.4 x 29.5 inch 210 x 95 x 75 cm / 82.7 x 37.4 x 29.5 inch 240 x 95 x 75 cm / 94.4 x 37.4 x 29.5 inch
Package:	170 x 105 x 20 cm / 67.0 x 39.4 x 7.8 inch 220 x 105 x 20 cm / 86.6 x 39.4 x 7.8 inch 250 x 105 x 20 cm / 96.2 x 39.4 x 7.8 inch

Weights

Product:	60 / 70 / 80 kg

Marks

Custom | Made in Holland | FSC

*Specifications are subject to change without prior notice.
Colours on screen/print may not be representative.

info@spell-online.com | www.spell-online.com

CATWALKER Tailored

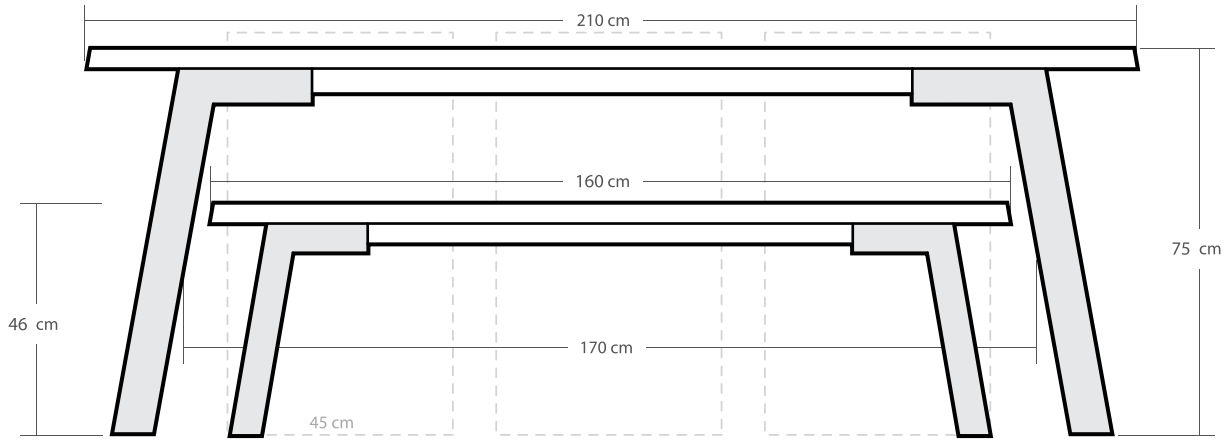

For Tailored Bench (Length) sizes that need to slide under your Tailored table (Length) size, please follow: Table Length - 50cm.

e.g CW Table (L) 210 cm, fitting CW Bench (L) 160 cm.