spell©

Odyssey High

Information

Product code:	OD.HI.11.01
Designer:	Sander van der Haar
Year of design:	2010
Material:	Steel frame with polyvinyl /cotton shades
Included:	150 cm cables and ceiling caps
Optional:	300 cm cables and custom colours

Colours of inside top shade

Brushed Silver | Brushed Gold | Brushed Copper

Colours of top and bottom shade

Black | White | Grey

Dimensions (Length x Width x Height)

Product:	100 x 44 x 55 cm / 39.4 x 17.3 x 21.7 inch
Package:	109 x 46 x 59 cm / 42.9 x 18.1 x 22.4 inch

Weights

Product:	5 kg	Package:	7 kg

Marks

CE | Max. 60W | 230V | E27 | Made in Holland

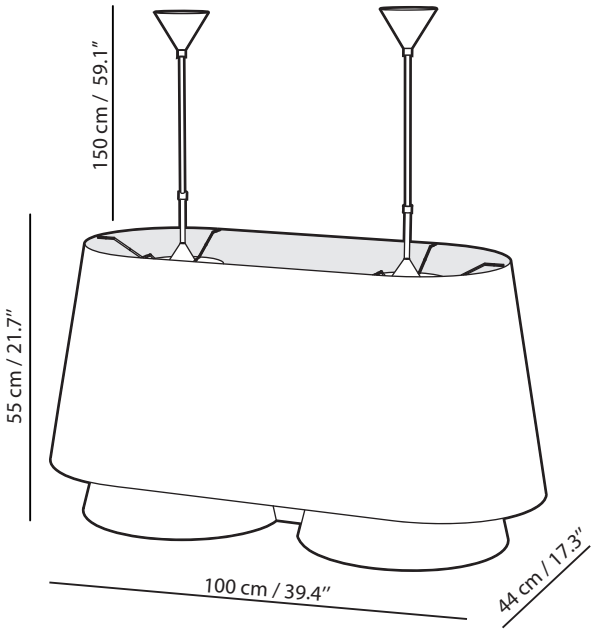

*Specifications are subject to change without prior notice.
Colours on screen/print may not be representative.

P.O. Box 5515, 6802 EM Arnhem, the Netherlands | +31 (0)26 3610162 | info@spell-online.com | www.spell-online.com